Type 1+2 AC surge protector - 3-phase+N

DAC1-13S-40-275



- Type 1 + 2 AC surge protector
- In : 20 kA
- Iimp : 12.5 kA
- Pluggable module for each phase
- Remote signaling
- EN 61643-11, IEC 61643-11 certified
- UL1449 ed.5 compliance

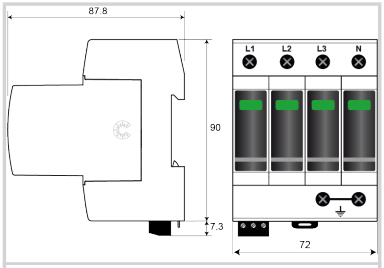

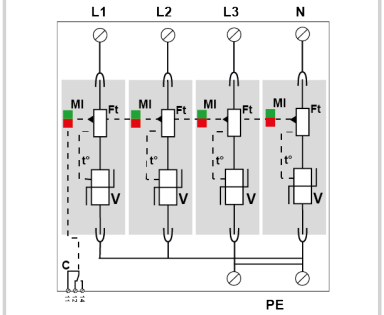

V: High-energy varistor
Ft: Thermal fuse
t°: Thermal disconnection system
MI: Disconnection indicator

Electrical Characteristics		
SPD type	IEC	1+2
Network		230/400V
AC system		TNS
Max. AC operating voltage	Uc	275 Vac
Temporary Over Voltage (TOV) Characteristics - 5 sec. *Without disconnection*	UT	335 Vac withstand
Temporary Over Voltage (TOV) Characteristics - 120 mn *Without disconnection or with safety disconnection*	UT	440 Vac disconnection
Residual Current *Leakage current to Ground*	Ipe	< 1 mA
Follow current	If	None
Nominal discharge current *15 x 8/20 µs impulses*	In	20 kA
Max. discharge current *max. withstand @ 8/20 µs by pole*	Imax	50 kA
Total Maximum discharge current *max. total withstand @ 8/20 µs*	Imax Total	200 kA
Impulse current by pole *max. withstand 10/350µs by pole*	Iimp	12.5 kA
Impulse current N/PE *max. withstand 10/350µs*	Iimp N /PE	50 kA
Total lightning current *max. total withstand @ 10/350µs*	Itotal	50 kA
Specific energy by pole *max. withstand 10/350 µs*	W/R	40 kJ/ohm
Protection mode(s)		L/PE and N/PE
Protection level N/PE *@ In (8/20µs)*	Up N/PE	1.3 kV
Protection level L/PE *@ In (8/20µs)*	Up L/PE	1.3 kV
Protection level N/PE at 5 kA *@ 5 kA (8/20µs)*	Up-5kA	1 kV
Residual voltage L/PE at 5 kA *@ 5 kA (8/20µs)*	Up-5kA	1 kV
Admissible short-circuit current	Isccr	50 000 A
Mechanical Characteristics		
Technology		MOV
SPD configuration		3-phase+Neutral
Connection to Network		By screw terminals: 2.5-25mm² (35mm² rigid)
Format		Plug-in modular box
Mounting		Symmetrical rail 35 mm (EN 60715)
Housing material		Thermoplastic UL94 V-0
Operating temperature	Tu	-40/+85°C
Protection rating		IP20
Failsafe mode		Disconnection from AC network
Disconnection indicator		1 mechanical indicator by pole - Red/Green
Spare module(s)		MDAC1-13-275
Remote signaling of disconnection		Output on changeover contact
Wiring for remote signaling		1.5 mm² max.
Max. Voltage/Current for remote signaling		250 V / 0.5 A (AC) / 30 V / 3 A (DC)
Dimensions		See diagram - 4TE (EN43880)
Weight		0.670 kg
Disconnectors		
Thermal disconnector		Internal
Installation ground fault breaker		Type 'S' or delayed
Back-up protection device		max. 315 A (gL/gG)
Standards		
Standards compliance		IEC 61643-11 / EN 61643-11 / UL1449 ed.5
Certification		KEMA
Part number		
821710224		